Flash

Reliable & Innovative

54 LED MACHINE LAMP

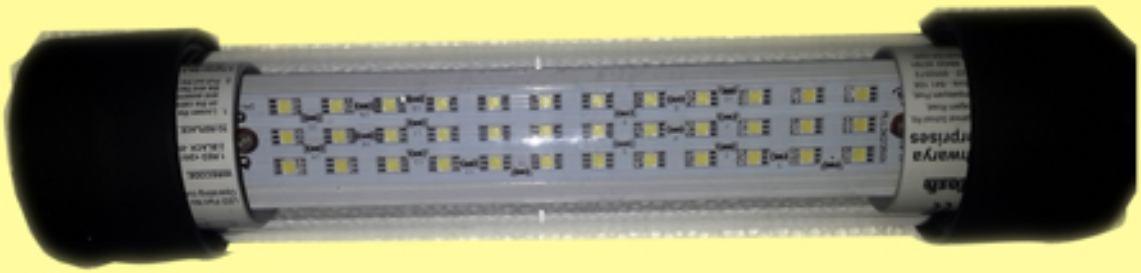

SPECIFICATIONS:

* INPUT VOLTAGE	: 24 VOLT DC.
* TOTAL LED's	: 54 nos
* TOTAL CURRENT	: 415mA .
* TOTAL POWER	: 10 watts.
* LED MAKE	: SEOUL .
* LED TYPE	: 5050 package.
* OPERATING TEMP	: -30 to 100 c.
* COLOR CODE	: COOL WHITE.
* COLOR TEMP	: 6000 K
* GLASS TYPE	: BOROSIL IP67

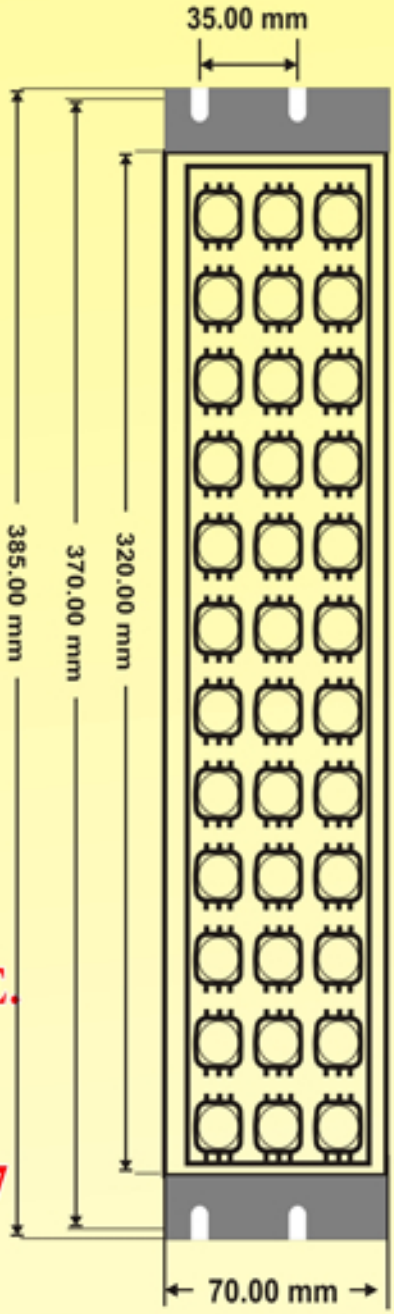

AISHWARYA ENTERPRISES

334/1F, AGARWAL SCHOOL ROAD
KNG PUDUR PIRIVU,THADAGAM ROAD
COIMBATORE. 641108
MOB: 7373035781, 9842135781
Email: sales@flashcbe.com
Website: www.flashcbe.com